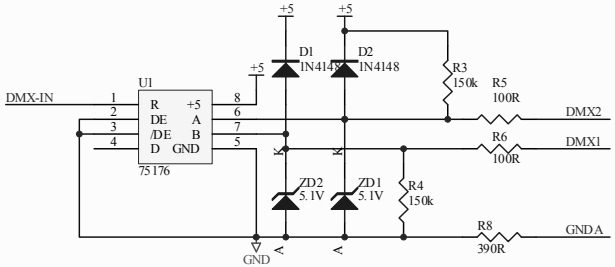
+5
+5
D1
1N4148
D2
1N4148
R3
150k
R5
100R
DMX-IN
U1
R
DE
/DE
D
+5
A
B
GND
75176
DMX2
R6
100R
DMX1
ZD2
5.1V
ZD1
5.1V
R4
150k
R8
390R
GNDA
GND

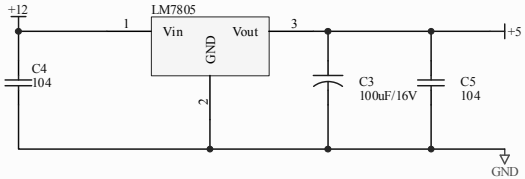
+12
U2
LM7805
Vin
Vout
GND
+5
C4
104
C3
100uF/16V
C5
104
GND

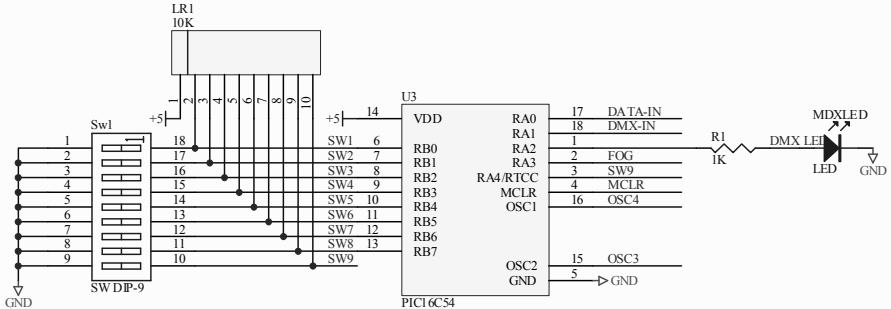
LR1
10K
Sw1
SW DIP-9
U3
VDD
RB0
RB1
RB2
RB3
RB4
RB5
RB6
RB7
RA0
RA1
RA2
RA3
RA4/RTCC
MCLR
OSC1
OSC2
GND
PIC16C54
DATA-IN
DMX-IN
FOG
SW9
MCLR
OSC4
OSC3
R1
1K
MDXLED
DMX LED
LED
GND

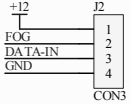
+12
J2
FOG
DATA-IN
GND
CON3

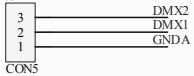
J3
DMX2
DMX1
GNDA
CON5

+5
C7
104P
GND

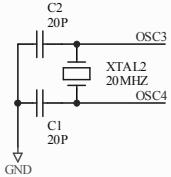
C2
20P
OSC3
XTAL2
20MHZ
OSC4
C1
20P
GND

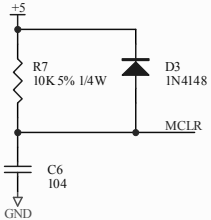
+5
R7
10K 5% 1/4W
D3
1N4148
MCLR
C6
104
GND

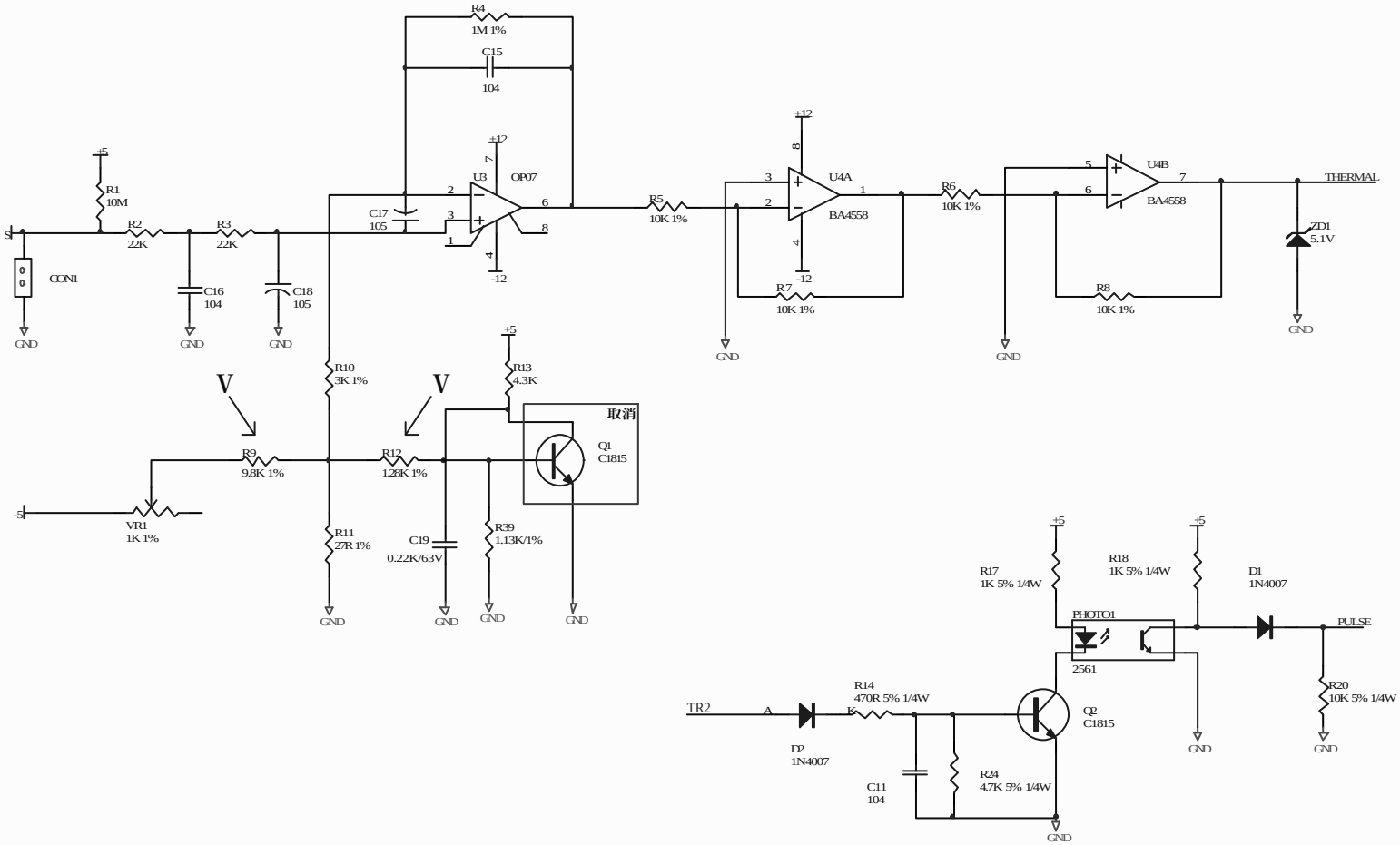
R4
1M 1%
C15
104
+12
U3
OP07
-12
C17
105
R1
10M
+5
S
R2
22K
R3
22K
CON1
C16
104
C18
105
GND
R5
10K 1%
U4A
BA4558
R7
10K 1%
R6
10K 1%
U4B
BA4558
R8
10K 1%
THERMAL
ZD1
5.1V
R10
3K 1%
R13
4.3K
V
V
取消
Q1
C1815
R9
9.8K 1%
R12
1.28K 1%
-5
VR1
1K 1%
R11
27R 1%
C19
0.22K/63V
R39
1.13K/1%
R17
1K 5% 1/4W
R18
1K 5% 1/4W
D1
1N4007
PHOTO1
2561
PULSE
R20
10K 5% 1/4W
TR2
A
K
D2
1N4007
R14
470R 5% 1/4W
C11
104
R24
4.7K 5% 1/4W
Q2
C1815

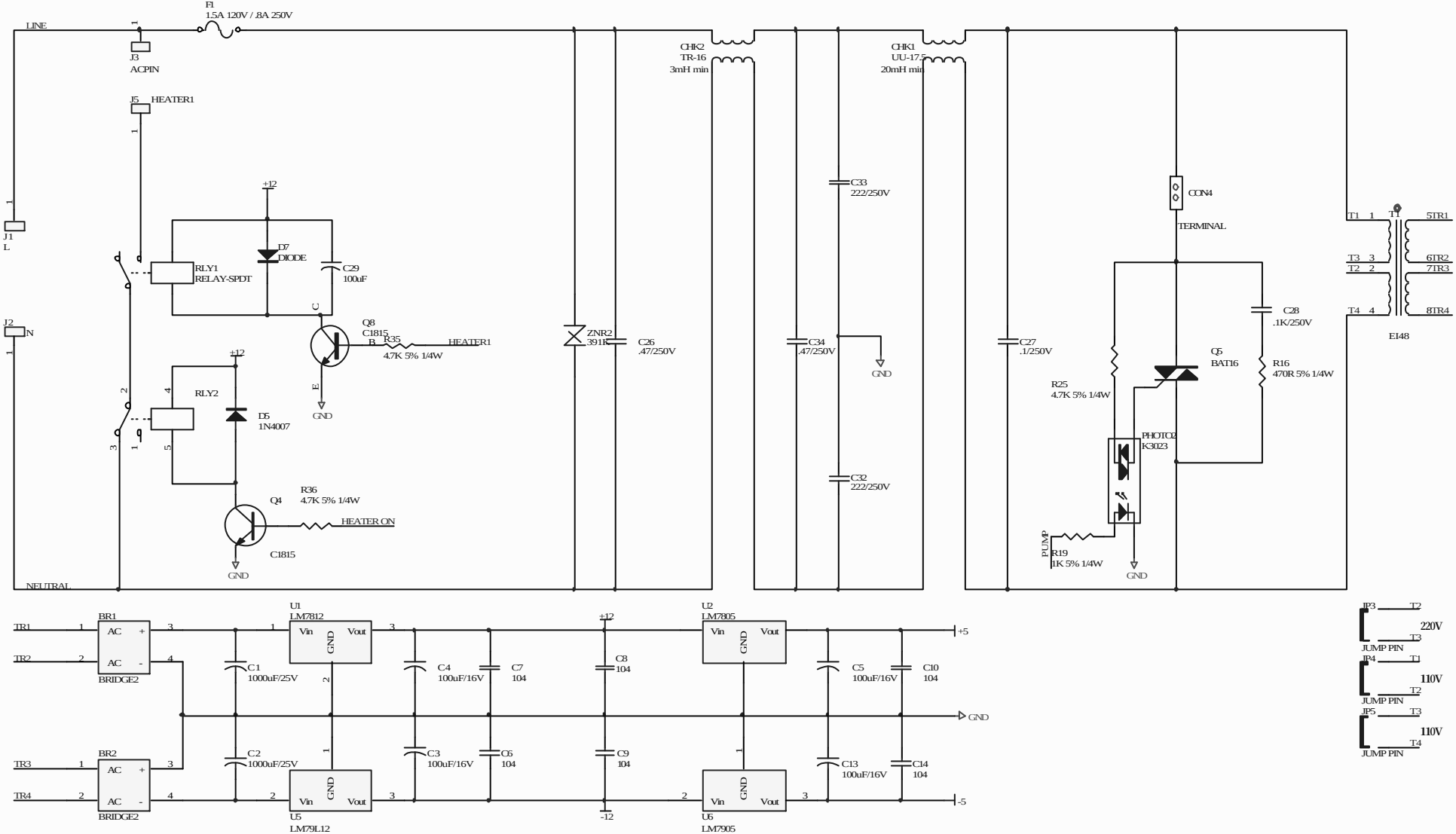
LINE
F1
1.5A 120V / .8A 250V
J3
ACPIN
J5 HEATER1
J1
L
J2
N
NEUTRAL
RLY1
RELAY-SPDT
RLY2
D7
DIODE
C29
100uF
+12
Q8
C1815
R35
4.7K 5% 1/4W
HEATER1
GND
D5
1N4007
Q4
R36
4.7K 5% 1/4W
HEATER ON
C1815
ZNR2
391K
C26
.47/250V
CHK2
TR-16
3mH min
C33
222/250V
C34
.47/250V
C32
222/250V
CHK1
UU-17.5
20mH min
C27
.1/250V
CON4
TERMINAL
C28
.1K/250V
Q5
BAT16
R16
470R 5% 1/4W
R25
4.7K 5% 1/4W
PHOTO2
K3023
PUMP
R19
1K 5% 1/4W
T1
5TR1
6TR2
7TR3
8TR4
E148
BR1
BRIDGE2
BR2
BRIDGE2
TR1
TR2
TR3
TR4
U1
LM7812
U5
LM79L12
U2
LM7805
U6
LM7905
C1
1000uF/25V
C2
1000uF/25V
C4
100uF/16V
C3
100uF/16V
C7
104
C6
104
C8
104
C9
104
C5
100uF/16V
C13
100uF/16V
C10
104
C14
104
+5
-5
-12
JP3
220V
JP4
110V
JP5
110V
JUMP PIN

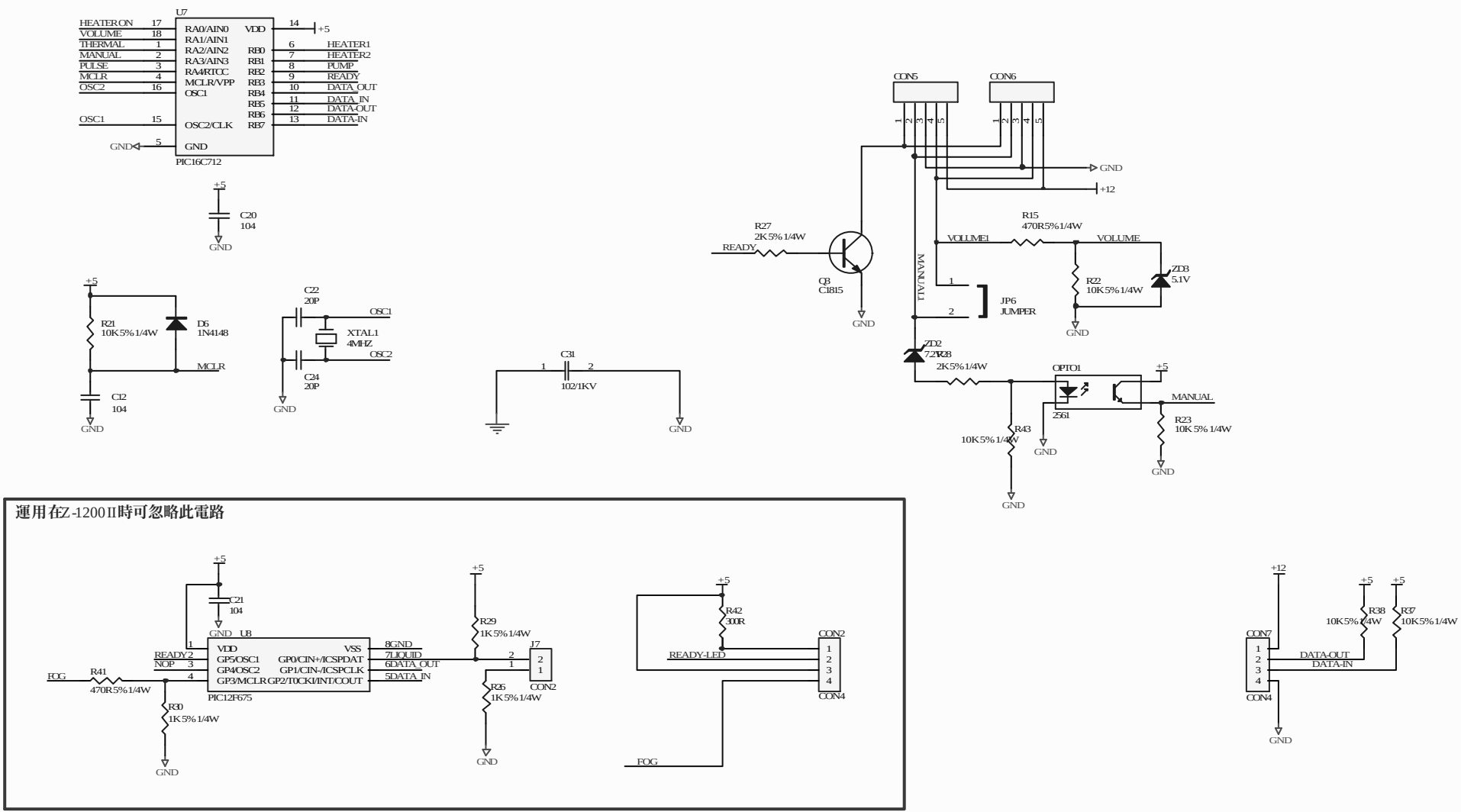
U7
HEATER ON 17
VOLUME 18
THERMAL 1
MANUAL 2
PULSE 3
MCLR 4
OSC2 16
OSC1 15
GND 5
RA0/AIN0
RA1/AIN1
RA2/AIN2
RA3/AIN3
RA4/RTCC
MCLR/VPP
OSC1
OSC2/CLK
GND
VDD 14
RB0 6
RB1 7
RB2 8
RB3 9
RB4 10
RB5 11
RB6 12
RB7 13
HEATER1
HEATER2
PUMP
READY
DATA_OUT
DATA_IN
DATA-OUT
DATA-IN
PIC16C712
+5
C20
104
GND
CON5
CON6
GND
+12
R27
2K 5% 1/4W
READY
Q3
C1815
R15
470R 5% 1/4W
VOLUME1
VOLUME
MANUAL1
JP6
JUMPER
R22
10K 5% 1/4W
ZD3
5.1V
ZD2
7.2V
R28
2K 5% 1/4W
OPTO1
2561
MANUAL
R23
10K 5% 1/4W
R43
10K 5% 1/4W
R21
10K 5% 1/4W
D6
1N4148
MCLR
C12
104
C22
20P
OSC1
XTAL1
4MHZ
OSC2
C24
20P
C31
102/1KV
運用在Z-1200II時可忽略此電路
C21
104
U8
VDD
VSS
GP5/OSC1
GP0/CIN+/ICSPDAT
GP4/OSC2
GP1/CIN-/ICSPCLK
GP3/MCLR
GP2/T0CKI/INT/COUT
8GND
7LIQUID
6DATA_OUT
5DATA_IN
READY
NOP
FOG
R41
470R 5% 1/4W
R30
1K 5% 1/4W
PIC12F675
R29
1K 5% 1/4W
J7
CON2
R26
1K 5% 1/4W
R42
300R
READY-LED
CON4
FOG
CON7
DATA-OUT
DATA-IN
R38
10K 5% 1/4W
R37
10K 5% 1/4W